INTERIM GUIDANCE FOR

Specimen Collection, Transport, Testing, and Submission for Patients with Suspected Infection with Ebola Virus Disease

NOTIFICATION & CONSULTATION

Hospitals should follow their state and/or local health department procedures for notification and consultation for Ebola testing requests before contacting CDC.

CDC cannot accept any specimens without prior consultation.

FOR CONSULTATION, CALL THE EMERGENCY OPERATIONS CENTER AT **770-488-7100**

WHEN SPECIMENS SHOULD BE COLLECTED FOR EBOLA TESTING

Ebola virus is detected in blood only after onset of symptoms, most notably fever. It may take up to three days after onset of symptoms for the virus to reach detectable levels. Virus is generally detectable by real-time RT-PCR between 3 to 10 days after onset of symptoms.

3 days

Ideally, specimens should be taken when a symptomatic patient reports to a healthcare facility and is suspected of having an Ebola virus exposure. However, if the onset of symptoms is less than three days after potential exposure, a subsequent specimen will be required to rule out Ebola.

PREFERRED SPECIMENS FOR EBOLA TESTING

A minimum volume of 4 milliliters of whole blood preserved with EDTA, clot activator, sodium polyanethol sulfonate (SPS), or citrate in plastic collection tubes can be submitted for Ebola virus disease testing.

Specimens should be shipped at 4°C. Do not submit specimens to CDC in glass containers. Do not submit specimens preserved in heparin tubes.

4°C

Specimens other than blood may be submitted upon consult with the CDC.

Standard labeling should be applied for each specimen. The requested test needs to be identified only on the requisition and CDC specimen submission forms.

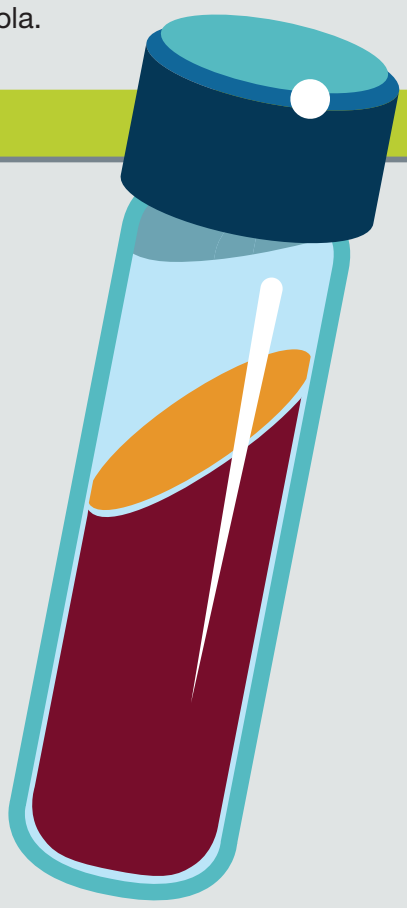

DIAGNOSTIC TESTING FOR EBOLA PERFORMED AT CDC

Several diagnostic tests are available for detection of Ebola virus disease. Acute infections will be confirmed using a real-time RT-PCR assay (CDC test directory code CDC -10309 Ebola Identification) in a CLIA-accredited laboratory. Virus isolation may also be attempted. Serologic testing for IgM and IgG antibodies will be completed for certain specimens and to monitor the immune response in confirmed Ebola virus disease patients (#CDC-10310 Ebola Serology).

Lassa fever is also endemic in certain areas of West Africa and may show symptoms similar to early Ebola virus disease. Diagnostic tests including but not limited to RT-PCR, antigen detection, and IgM serology may be utilized to rule out Lassa fever in patients who test negative for Ebola virus disease.

TRANSPORTING SPECIMENS WITHIN THE HOSPITAL / INSTITUTION

In compliance with 29 CFR 1910.1030, specimens should be placed in a durable, leak-proof secondary container for transport within a facility. To reduce the risk of breakage or leaks, do not use any pneumatic tube system for transporting specimens from a patient with suspected Ebola virus disease.

PACKAGING & SHIPPING CLINICAL SPECIMENS TO CDC

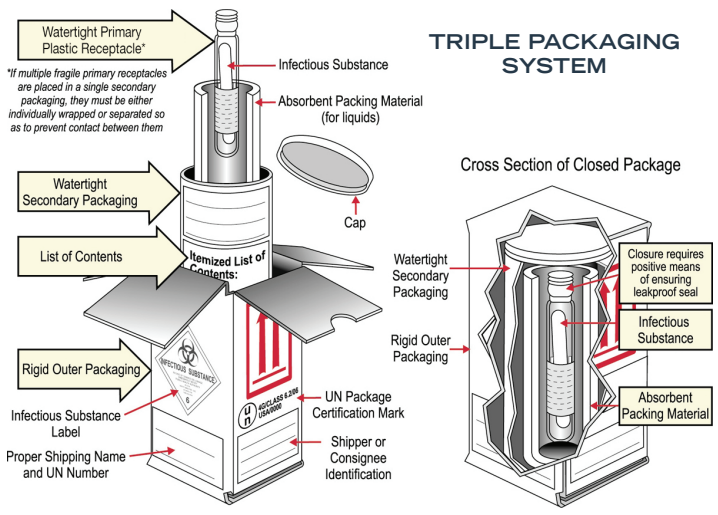

Specimens collected for Ebola virus disease testing should be packaged and shipped without attempting to open collection tubes or aliquot specimens.

Specimens for shipment should be packaged following the basic triple packaging system, which consists of a primary receptacle (a sealable specimen bag) wrapped with absorbent material, secondary receptacle (watertight, leak-proof), and an outer shipping package.

THE SUBMISSION PROCESS

Contact your state and/or local health department and CDC (770-488-7100) to determine the proper category for shipment based on clinical history and risk assessment by CDC and to obtain detailed shipping guidance and required CDC submission documents. State guidelines may differ and state or local health departments should be consulted before shipping.

INFORMATION ON SHIPPING & TRACKING IS AVAILABLE AT

www.cdc.gov/ebola